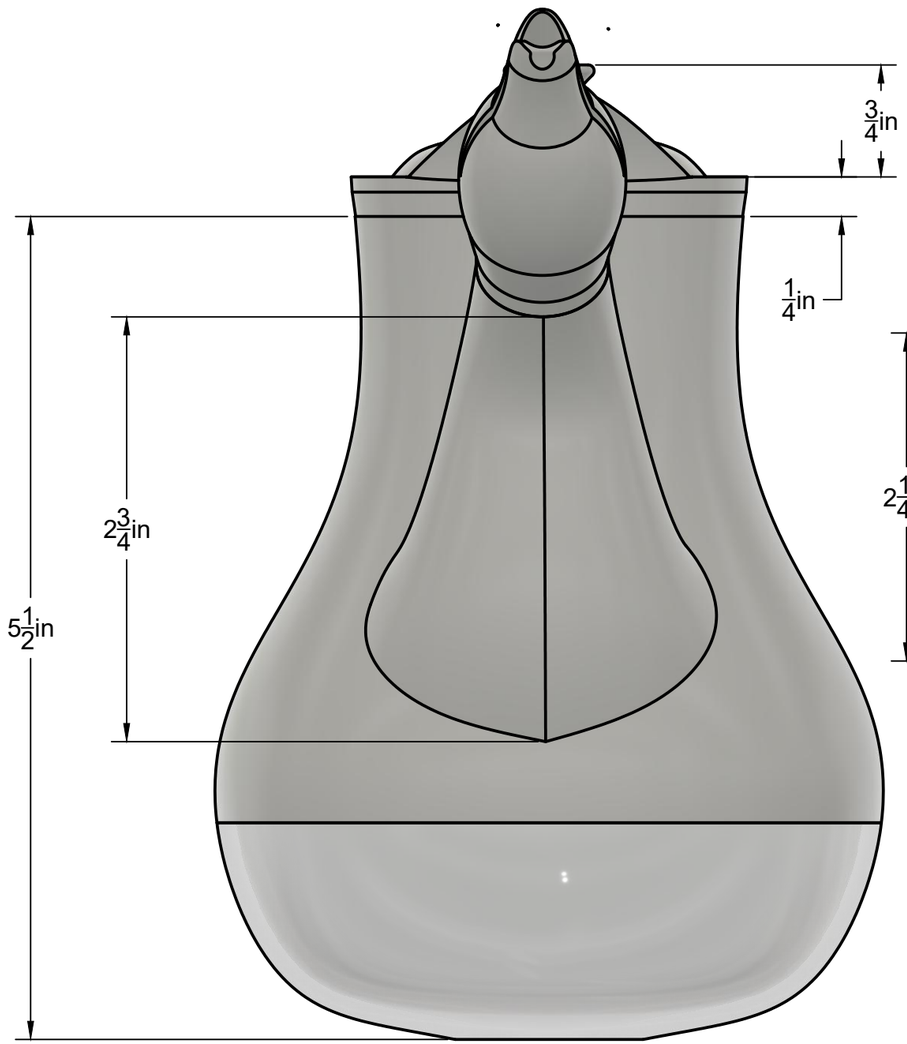

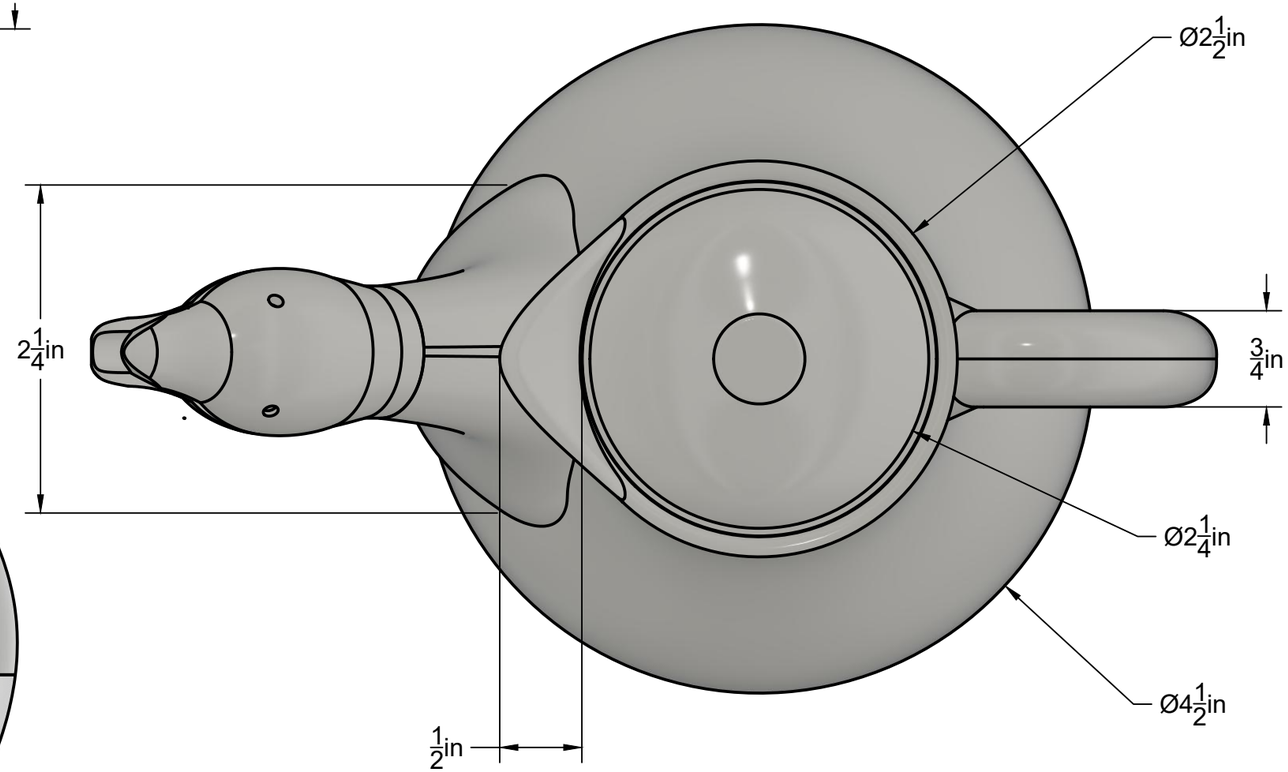

PROJECT Personal Projects				
TITLE Coffee Pot				
APPROVED	SIZE	CODE	DWG NO	REV
CHECKED	B			
DRAWN Alex N 11/2/2018	SCALE 1:1	WEIGHT		SHEET 2/2